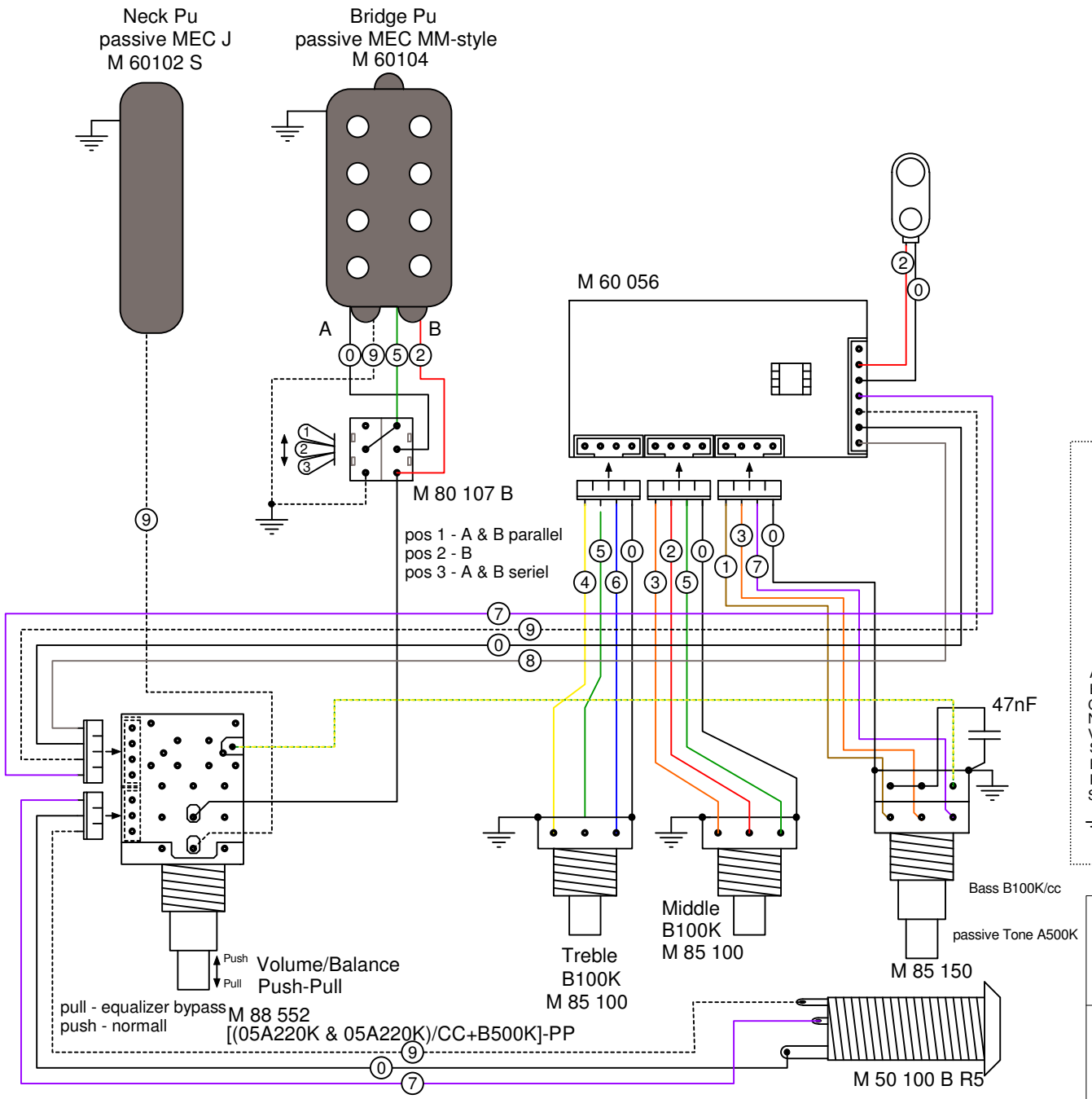

black 0
brown 1
red 2
orange 3
yellow 4
green 5
blue 6
purple 7
grey 8
white 9
- shrink tube
- ground

white connector pitch R4 - 2.5 mm
ivory connector pitch R5 - 2.0 mm

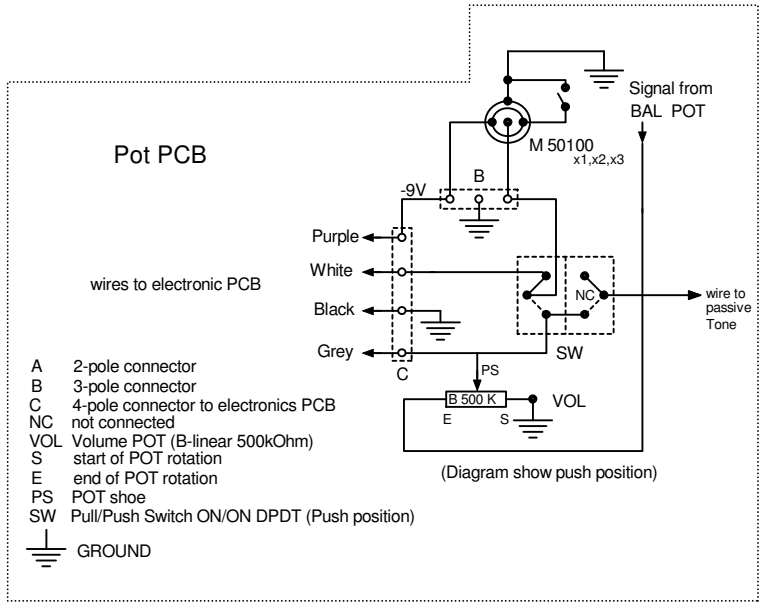

A 2-pole connector
B 3-pole connector
C 4-pole connector to electronics PCB
NC not connected
VOL Volume POT (B-linear 500kOhm)
S start of POT rotation
E end of POT rotation
PS POT shoe
SW Pull/Push Switch ON/ON DPDT (Push position)
GROUND

Warwick GmbH & Co Music Equipment Kg
Gewerbegebiet Wohlhausen
D-08258 Markneukirchen
Tel. +49 (0) 37422 555 0
Fax. +49 (0) 37422 555 99

Updated: 13.07.2016

M 60058 LTD02
FNA Jazzman LTD 2002