Sadowsky Electronics

MetroLine / MasterBuilt Will Lee, Onboard Bass Preamp (4-Knob System)

Master Volume / Balance / Vintage Tone Control (P/P) / Treble and Bass (stacked) / Mid-Boost Switch

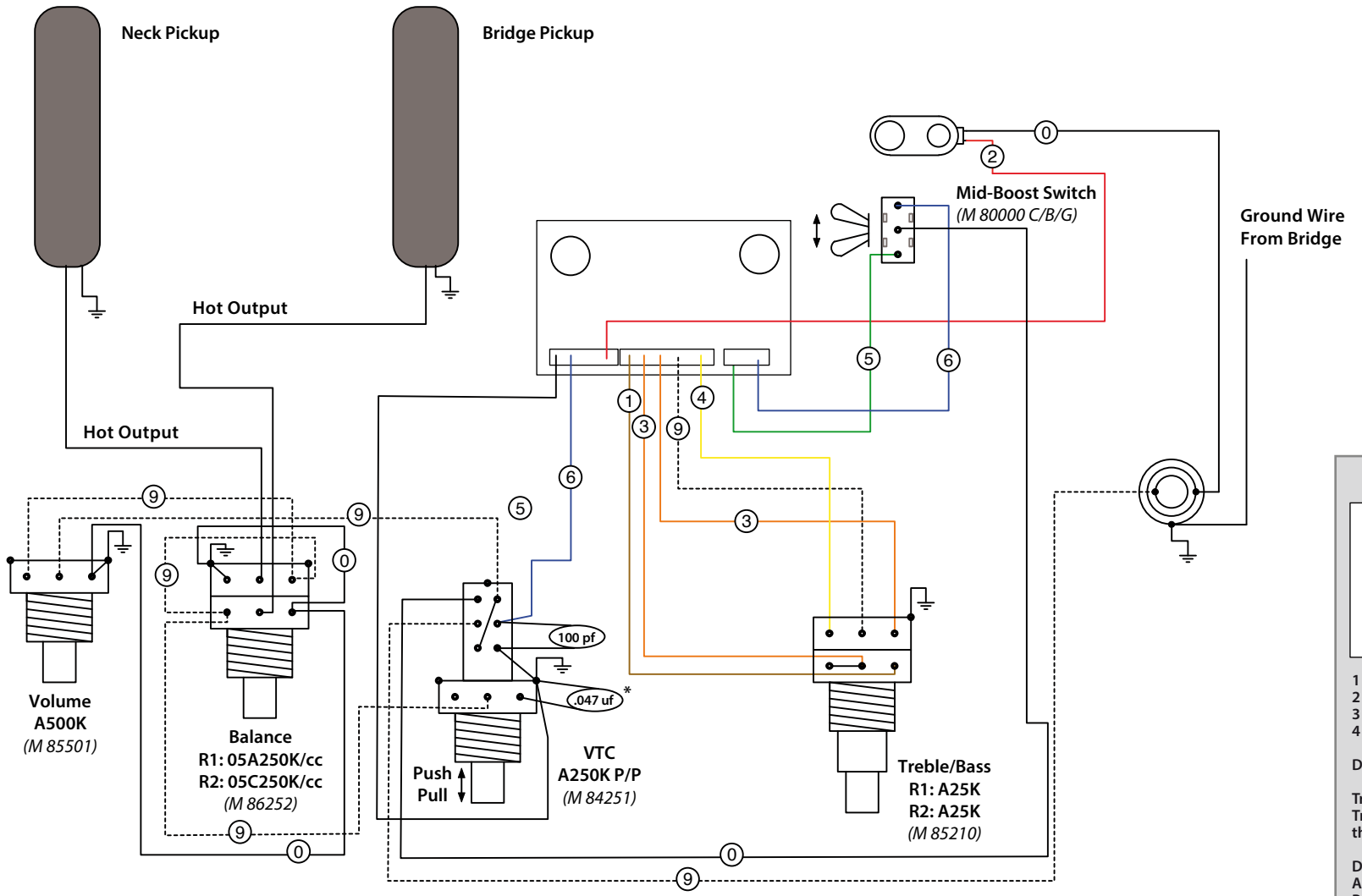

Black	0
Brown	1
Red	2
Orange	3
Yellow	4
Green	5
Blue	6
Purple	7
Grey	8
White	9
Shrink Tube	
Ground	

Mid-Boost Section

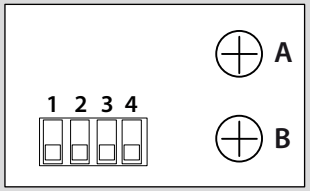

1 500 Hz, Q: 1 (narrow)
2 500 Hz, Q: 1.7 (wide)
3 800 Hz, Q: 1 (narrow)
4 800 Hz, Q: 1.7 (wide)

Default setting is #2

Trim-Pot A adjusts the gain of the Mid-Boost. Trim-Pot B control the total output level of the bass when the Mid-Boost is engaged.

Default setting is:
A: set to maximum
B: matched output level with and without Mid-Boost

** Note: For soapbar or humbucking style pickups, we recommend to use a 0.1 uf capacitor.*

Note: The manufacturer reserves the right to change these specifications without notice.