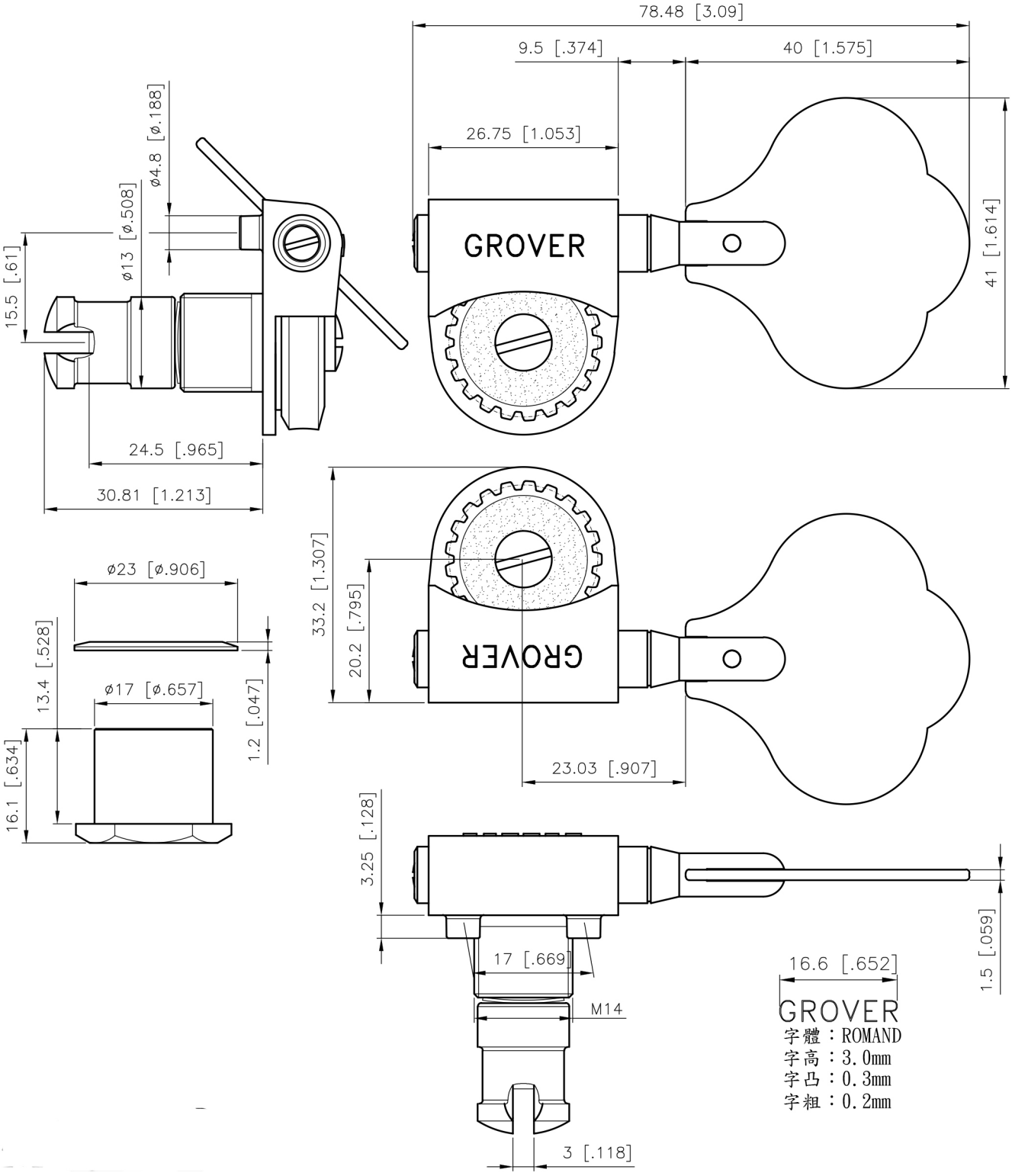

GEAR RATIO 20:1