RC 10603 B

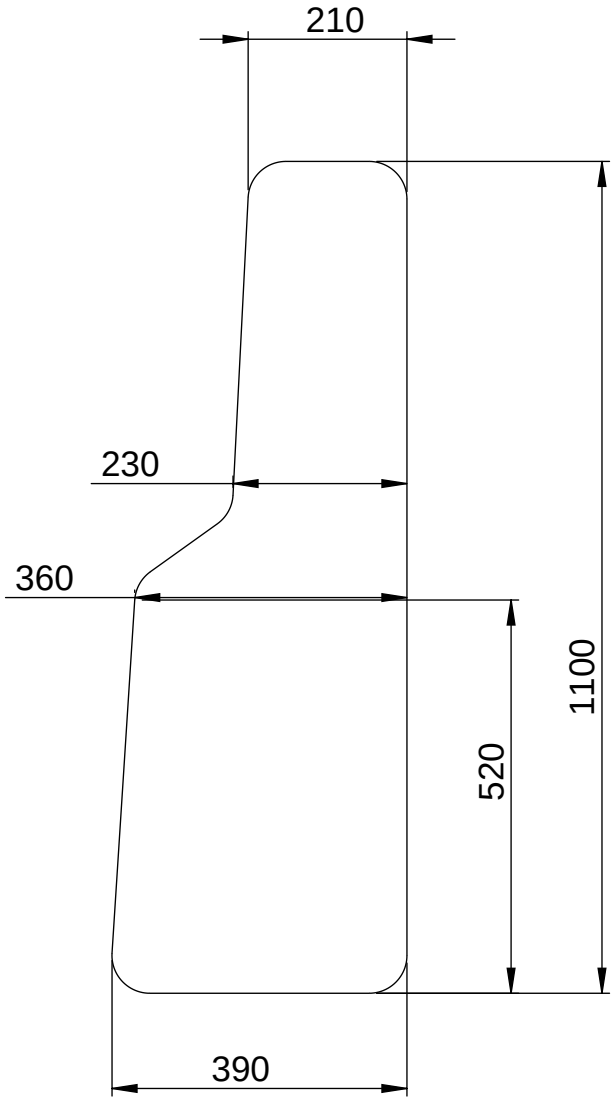

outside

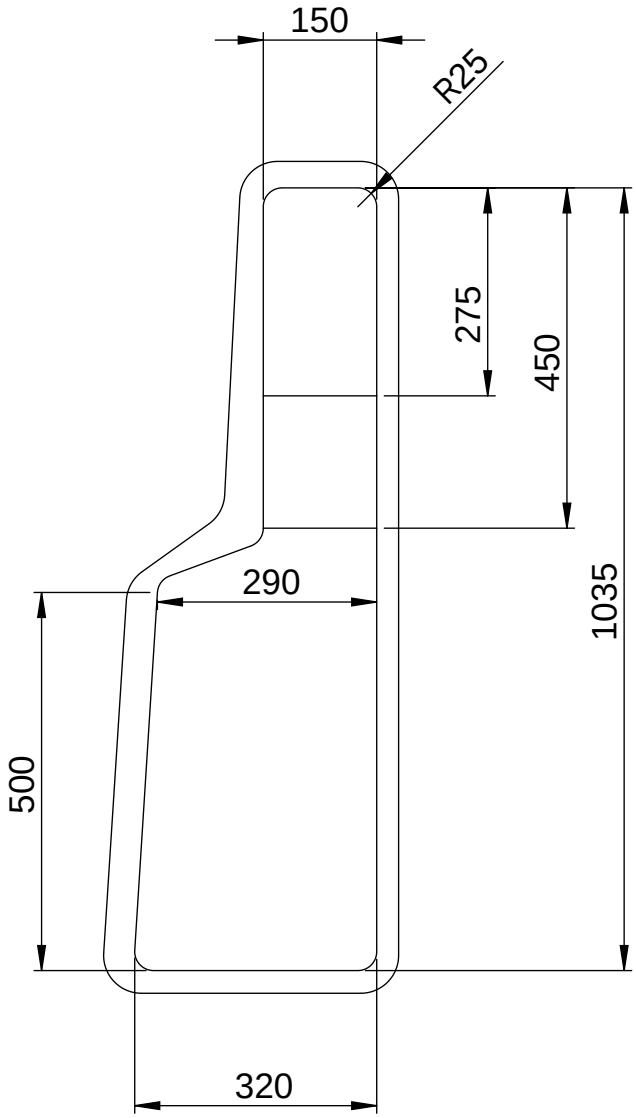

inside

approximate measurements in mm